Heavy Duty Power Relays

MR-199 Series

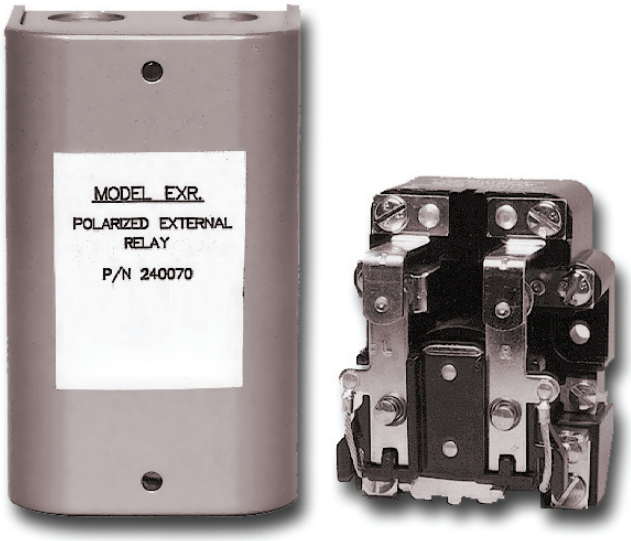

Overview

The MR-199 Heavy Duty Power Relays are designed for control applications where 30 Amp DPDT contacts are required. Two models are available: a 115 Vac coil and a 24 Vdc coil, each of which may be mounted in a rugged steel enclosure.

Standard Features

- Heavy duty 30 Amp DPDT contacts
- 24 Vdc or 120 Vac models available
- Sturdy metal enclosure

Wiring

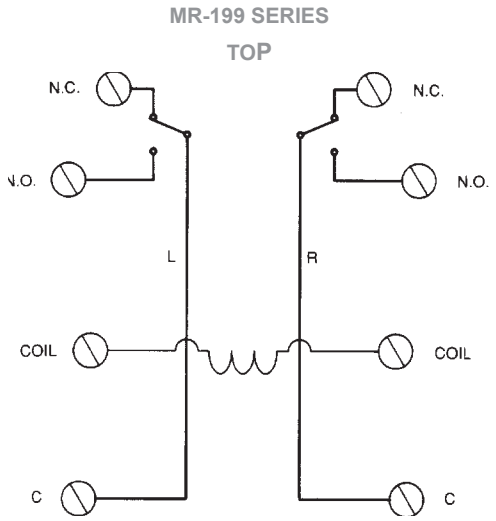

Specifications

Contact Arrangement	DPDT Standard
Contact Rating	30 Amps @ 300 Vac, 2 HP Motor Load
Coil Power	MR-199X-13:24 Vdc @ 85 mA
Temperature Range	-22°F to 122°F (-30°C to 50°C)

Dimensions	
MR-199X-13 & MR-199AX-14	3.13 H x 2.5 W X 2.31 inches (79.4 H x 63.5 W x 58.7 D mm)
MR-199X-13/C & MR-199AX-14/C	5.31 H x 3.38 W x 3.13 D inches (134.9 H x 85.9 W x 96.8 D mm)

Ordering Information

Model	Description
MR-199X-13	DPDT, 24 Vdc, relay only
MR-199X-13/C	DPDT, 24 Vdc, mounted in enclosure
MR-199AX-14	DPDT, 120 Vac, relay only
MR-199AX-14/C	DPDT, 120 Vac, mounted in enclosure

© 2007 ADT Security Services, Inc.
One Town Center Road
Boca Raton, FL 33489
www.adt.com